REVISIONS				
REV.	DESCRIPTION	AUTHOR	DATE	APPROVED
01	INITIAL DRAWING	ROLAND JASMIN	8/22/2012	MJY

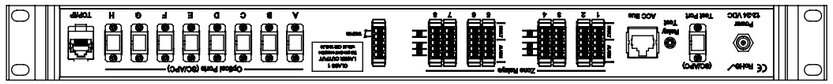

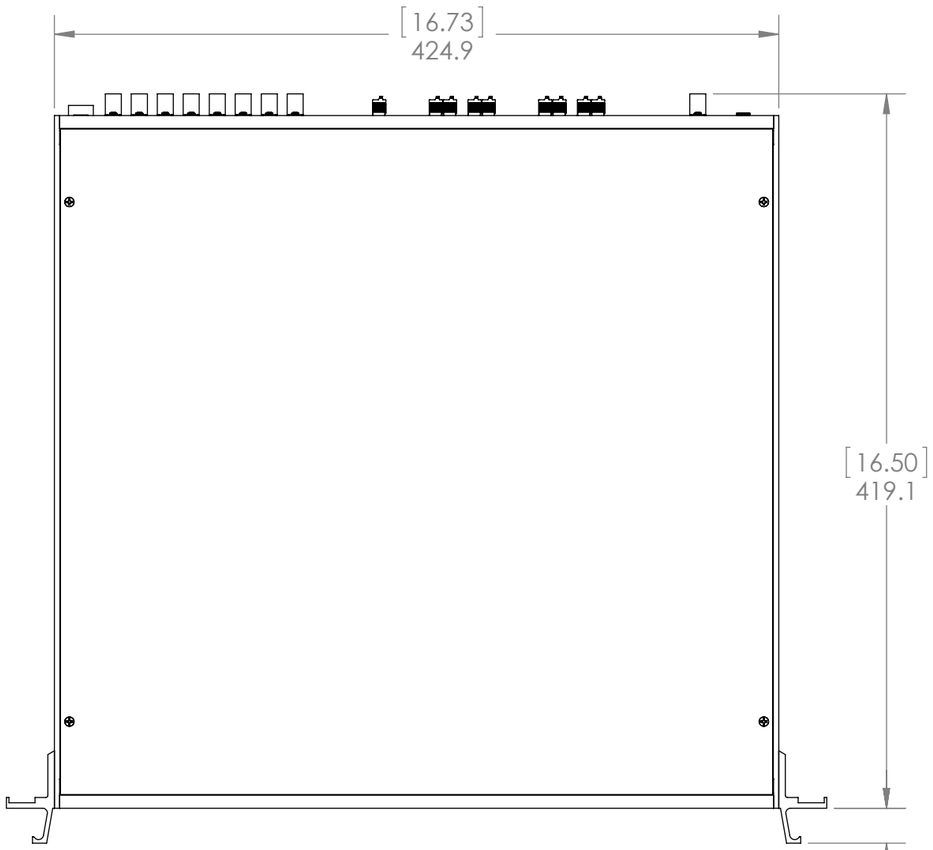

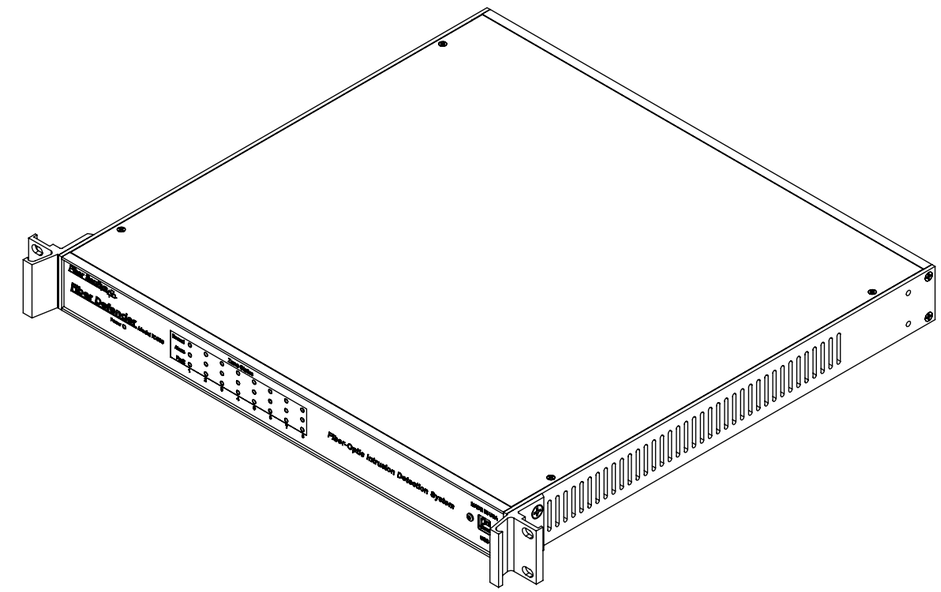

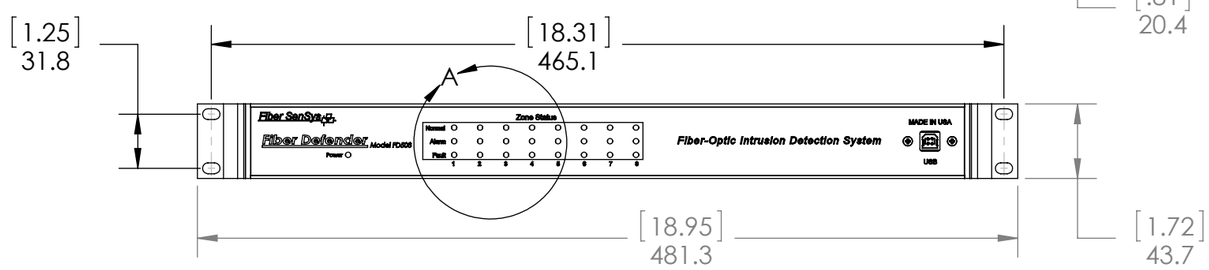

ZONE STATUS LEDS
DETAIL A
SCALE 1 : 1

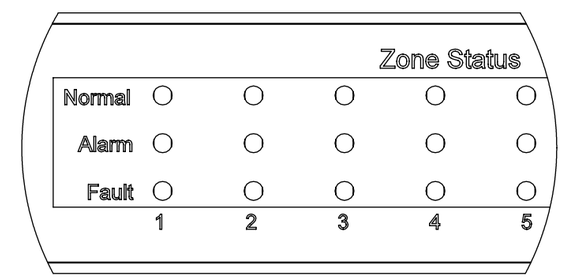

NOTES:

1. ALLOW 4 INCHES / 102mm MINIMUM FREE SPACE BEHIND UNIT FOR CABLING AND REMOVAL OF RELAY MODULE PLUGS.
2. DIMENSIONS SHOWN AS [INCHES]/mm.

UNLESS OTHERWISE SPECIFIED:
DIMENSIONS ARE IN INCHES
TOLERANCES:
ANGULAR ± 1 DEG
X.XX ± 0.010
X.XXX ± 0.005
DO NOT SCALE DRAWING

INTERPRET PER: ANSI Y14.5M
THIRD ANGLE PROJECTION

THE INFORMATION CONTAINED IN THIS DRAWING IS THE SOLE PROPERTY OF FIBER SENSYS INC. ANY REPRODUCTION IN PART OR AS A WHOLE WITHOUT THE WRITTEN PERMISSION OF FIBER SENSYS IS PROHIBITED.

CONFIDENTIAL-FSI ONLY

Fiber SenSys

TITLE: FD508 ALARM PROCESSOR UNIT (APU) DIAGRAM

SIZE	DRAWING/PART NO.	REV
B	DW-ENG-012	01

SCALE: 1:4 | SHEET 1 OF 1